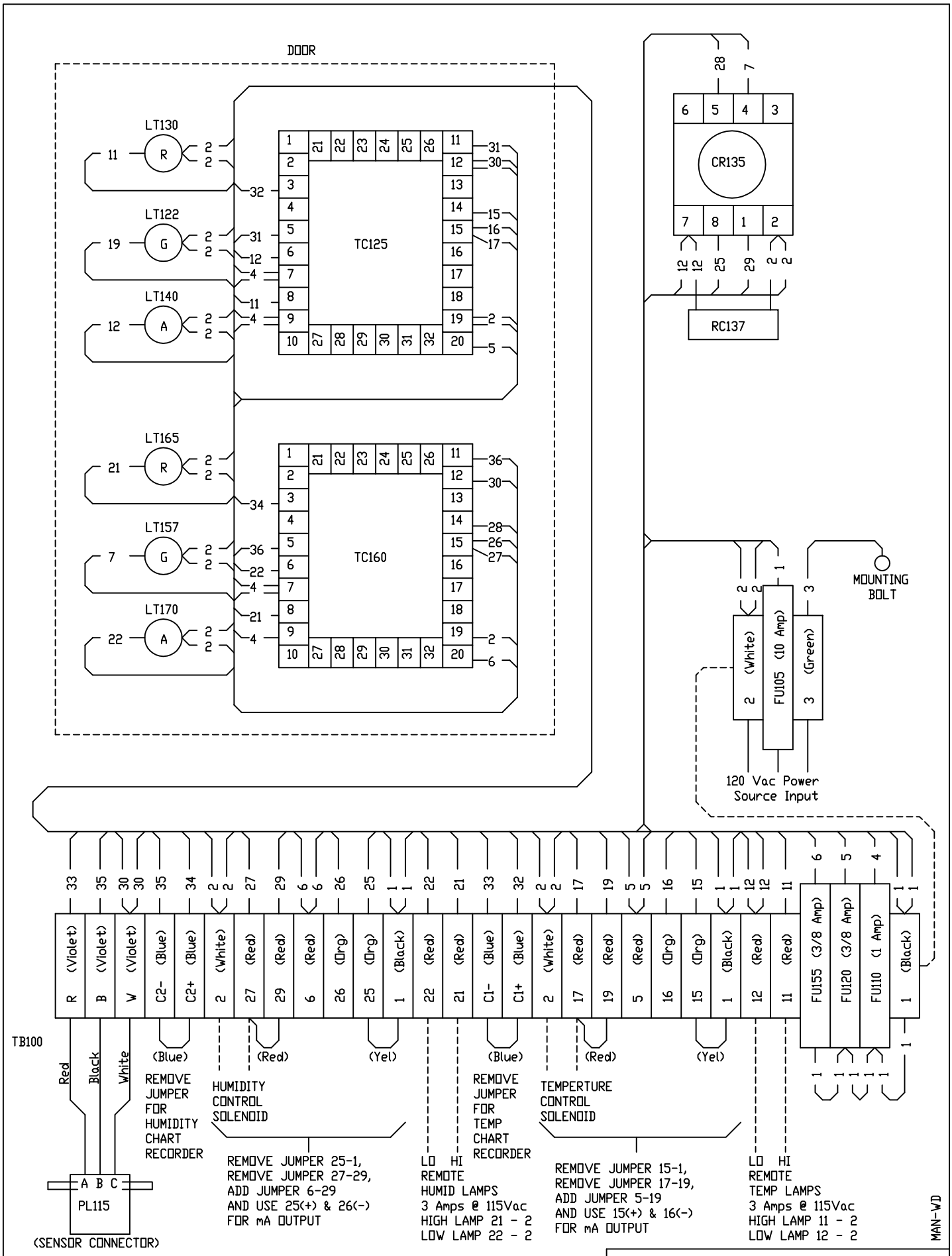

PROOFER CONTROL SYSTEM
WIRING DIAGRAM, PCS-2000
W. H. COOKE & CO., INC.
10 MAR 2008 Rev-B